General purpose, also suitable for stainless steel

S-TAP

Volume 3.2

NEW SIZES AVAILABLE NOW • NEW SIZES AVAILABLE NOW • NEW SIZES AVAILABLE NOW • NEW SIZES AVAILABLE NOW

Additional
SIZES

M | MF | FORM E
G | +0.1 | UNC
UNF | RC

INDEX

Blind Hole

Metric

S-SFT	**NEW SIZES**	PAGE 5
S-SFT 6G	**NEW**	PAGE 6
S-SFT 7G	**NEW**	PAGE 7
S-SFT +0.1	**NEW**	PAGE 8
S-SFT (FORM E)	**NEW**	PAGE 9
S-LT-SFT	**NEW**	PAGE 10
S-SFT-LH	**NEW**	PAGE 11
S-SFT-HB Weldon Shank	**NEW**	PAGE 12

Metric Fine

S-SFT		PAGE 13
S-SFT 6G	**NEW**	PAGE 14

G (BSP)

S-SFT	**NEW**	PAGE 15

UNC

S-SFT	**NEW**	PAGE 16

UNF

S-SFT	**NEW**	PAGE 17

BSW

S-SFT	**NEW**	PAGE 18

BSF

S-SFT	**NEW**	PAGE 19

BA

S-SFT	**NEW**	PAGE 20

Rc (BSPT)

S-TPT	**NEW**	PAGE 21

INDEX

Through Hole

Metric

S-POT	**NEW SIZES**	PAGE 22
S-POT 6G	**NEW**	PAGE 23
S-POT 7G	**NEW**	PAGE 24
S-POT +0.1	**NEW**	PAGE 25
S-LT-POT	**NEW**	PAGE 26
S-POT-LH	**NEW**	PAGE 27
S-POT-HB Weldon Shank	**NEW**	PAGE 28

Metric Fine

S-POT		PAGE 29
S-POT 6G	**NEW**	PAGE 30

G (BSP)

S-POT	**NEW**	PAGE 31

UNC

S-POT	**NEW**	PAGE 32

UNF

S-POT	**NEW**	PAGE 33

BSW

S-POT	**NEW**	PAGE 34

BSF

S-POT	**NEW**	PAGE 35

BA

S-POT	**NEW**	PAGE 36

KEY FEATURES: S-TAP

1. General purpose
2. Accelerate chip evacuation
   Variable lead flute (PAT.)
3. Also suitable for stainless steel
4. Steam oxide surface treatment
5. HSSE

S-SFT

Threading | Cutting taps | Metric

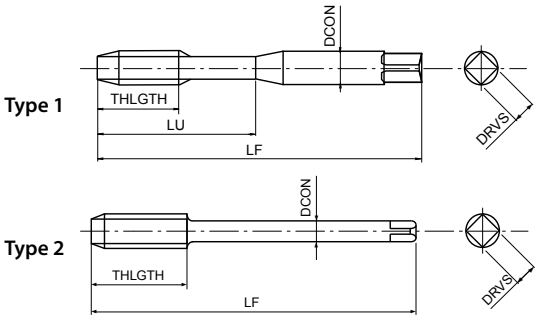

- HSSE spiral-flute cutting tap for blind holes
- Steam oxide treatment
- General purpose tapping in steels and stainless steels

P	P	P	P	M	K	
C <0,2%	0,25<C<0,4	C ≥ 0,45%	SCM	INOX	GGG	
10-15	8-14	8-14	7-11	7-12	7-14	m/min

M | HSSE | 0X | 40° | ISO 2 6H | ISO 1 5H<M1,4 | C/2,5 | DIN 371 | DIN 376

EDP	TD	TP	LF	THLGTH	LU	DCON	DRVS	NOF	Type	DIN
48223111	1	0,25	40	-	5	2,5	2,1	2	1	371
48223112	1,1	0,25	40	-	5	2,5	2,1	2	1	371
48223113	1,2	0,25	40	-	5	2,5	2,1	2	1	371
48223115	1,4	0,3	40	-	6	2,5	2,1	2	1	371
48223118	1,6	0,35	40	-	7	2,5	2,1	2	1	371
48223119	1,7	0,35	40	-	8	2,5	2,1	2	1	371
48223120	1,8	0,35	40	-	8	2,5	2,1	2	1	371
48223125	2	0,4	45	4	10	2,8	2,1	2	1	371
48223127	2,2	0,45	45	5	11	2,8	2,1	2	1	371
48223128	2,3	0,4	45	4	12	2,8	2,1	2	1	371
48223133	2,5	0,45	50	4,5	13	2,8	2,1	2	1	371
48223136	2,6	0,45	50	4,5	13	2,8	2,1	2	1	371
48223138	3	0,5	56	5	18	3,5	2,7	3	1	371
48223142	3,5	0,6	56	6	20	4	3	3	1	371
48223144	4	0,7	63	7	21	4,5	3,4	3	1	371
48223147	4,5	0,75	70	7,5	25	6	4,9	3	1	371
48223149	5	0,8	70	8	25	6	4,9	3	1	371
48223152	5,5	0,9	80	9	30	6	4,9	3	1	371
48223155	6	1	80	10	30	6	4,9	3	1	371
48223158	7	1	80	10	30	7	5,5	3	1	371
48223161	8	1,25	90	13	35	8	6,2	3	1	371
48223165	9	1,25	90	13	35	9	7	3	1	371
48223169	10	1,5	100	15	39	10	8	3	1	371
48223140	3	0,5	56	5	-	2,2	-	3	2	376
48223185	4	0,7	63	7	-	2,8	2,1	3	2	376
48223150	5	0,8	70	8	-	3,5	2,7	3	2	376
48223187	6	1	80	10	-	4,5	3,4	3	2	376
48223159	7	1	80	10	-	5,5	4,3	3	2	376
48223188	8	1,25	90	13	-	6	4,9	3	2	376
48223166	9	1,25	90	13	-	7	5,5	3	2	376
48223189	10	1,5	100	15	-	7	5,5	3	2	376
48223175	11	1,5	100	15	-	8	6,2	3	2	376
48223179	12	1,75	110	18	-	9	7	4	2	376
48223191	14	2	110	20	-	11	9	4	2	376
48223202	16	2	110	20	-	12	9	4	2	376
48223214	18	2,5	125	25	-	14	11	4	2	376
48223228	20	2,5	140	25	-	16	12	4	2	376
48223238	22	2,5	140	25	-	18	14,5	4	2	376
48223247	24	3	160	30	-	18	14,5	4	2	376

S-SFT 6G

Threading | Cutting taps | Metric

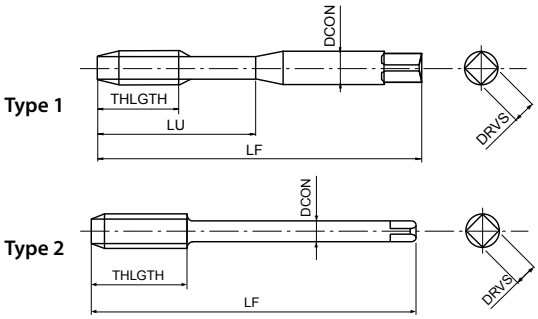

- HSSE spiral-flute cutting tap for blind holes
- Steam oxide treatment
- General purpose tapping in steels and stainless steels
- For 6G internal thread tolerance

P	P	P	P	M	K	
C <0,2%	0,25<C<0,4	C ≥ 0,45%	SCM	INOX	GGG	
10-15	8-14	8-14	7-11	7-12	7-14	m/min

M | HSSE | 0X | 40° | ISO 2 6G | C/2,5 | DIN 371 | DIN 376

EDP	TD	TP	Oversize	LF	THLGTH	LU	DCON	DRVS	NOF	Type	DIN
48269125	2	0,4	0,0190	45	3,2	10	2,8	2,1	2	1	371
48269133	2,5	0,45	0,0200	50	3,6	13	2,8	2,1	2	1	371
48269138	3	0,5	0,0200	56	4	18	3,5	2,7	3	1	371
48269144	4	0,7	0,0220	63	5,6	21	4,5	3,4	3	1	371
48269149	5	0,8	0,0240	70	6,4	25	6	4,9	3	1	371
48269155	6	1	0,0260	80	8	30	6	4,9	3	1	371
48269161	8	1,25	0,0280	90	10	35	8	6,2	3	1	371
48269169	10	1,5	0,0320	100	12	39	10	8	3	1	371
48269179	12	1,75	0,0340	110	14	-	9	7	4	2	376
48269191	14	2	0,0380	110	16	-	11	9	4	2	376
48269202	16	2	0,0380	110	16	-	12	9	4	2	376

S-SFT 7G

Threading | Cutting taps | Metric

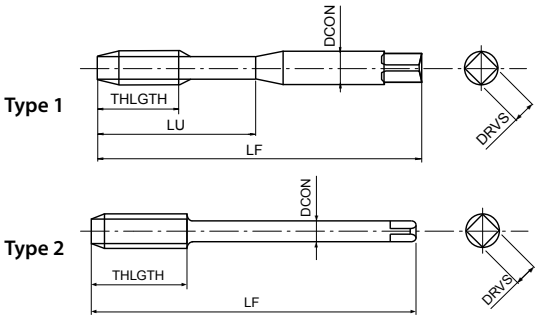

- HSSE spiral-flute cutting tap for blind holes
- Steam oxide treatment
- General purpose tapping in steels and stainless steels
- For 7G internal thread tolerance

P	P	P	P	M	K	
C <0,2%	0,25<C<0,4	C ≥ 0,45%	SCM	INOX	GGG	
10-15	8-14	8-14	7-11	7-12	7-14	m/min

M | HSSE | 0X | 40° | 7G | C/2,5 | DIN 371 | DIN 376

EDP	TD	TP	Oversize	LF	THLGTH	LU	DCON	DRVS	NOF	Type	DIN
48274125	2	0,4	0,0380	45	3,2	10	2,8	2,1	2	1	371
48274133	2,5	0,45	0,0400	50	3,6	13	2,8	2,1	2	1	371
48274138	3	0,5	0,0400	56	4	18	3,5	2,7	3	1	371
48274144	4	0,7	0,0440	63	5,6	21	4,5	3,4	3	1	371
48274149	5	0,8	0,0480	70	6,4	25	6	4,9	3	1	371
48274155	6	1	0,0520	80	8	30	6	4,9	3	1	371
48274161	8	1,25	0,0560	90	10	35	8	6,2	3	1	371
48274169	10	1,5	0,0640	100	12	39	10	8	3	1	371
48274179	12	1,75	0,0680	110	14	-	9	7	4	2	376
48274191	14	2	0,0760	110	16	-	11	9	4	2	376
48274202	16	2	0,0760	110	16	-	12	9	4	2	376

S-SFT +0.1

Threading | Cutting taps | Metric

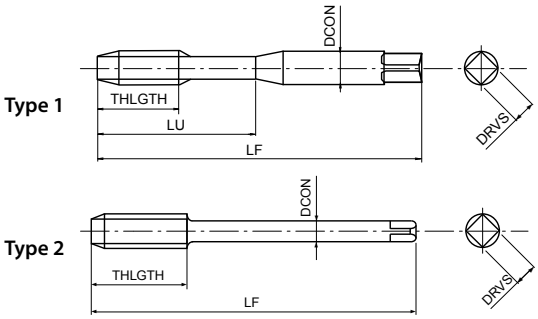

- HSSE spiral-flute cutting tap for blind holes
- Steam oxide treatment
- General purpose tapping in steels and stainless steels
- Oversized tap for 6H +0,1mm thread tolerance

P	P	P	P	M	K	
C <0,2%	0,25<C<0,4	C ≥ 0,45%	SCM	INOX	GGG	
10-15	8-14	8-14	7-11	7-12	7-14	m/min

M | HSSE | 0X | 40° | 6H +0.1 | C/2,5 | DIN 371 | DIN 376

EDP	TD	TP	LF	THLGTH	LU	DCON	DRVS	NOF	Type	DIN
48270138	3	0,5	56	4	18	3,5	2,7	3	1	371
48270144	4	0,7	63	5,6	21	4,5	3,4	3	1	371
48270149	5	0,8	70	6,4	25	6	4,9	3	1	371
48270155	6	1	80	8	30	6	4,9	3	1	371
48270161	8	1,25	90	10	35	8	6,2	3	1	371
48270169	10	1,5	100	12	39	10	8	3	1	371
48270179	12	1,75	110	14	-	9	7	4	2	376
48270191	14	2	110	16	-	11	9	4	2	376
48270202	16	2	110	16	-	12	9	4	2	376

S-SFT FORM E

Threading | Cutting taps | Metric

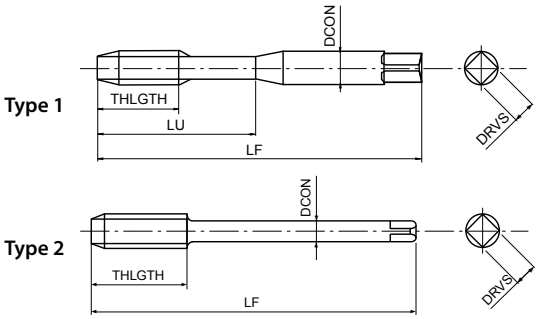

- HSSE spiral-flute cutting tap for blind holes
- Steam oxide treatment
- General purpose tapping in steels and stainless steels
- Chamfer Form E

P	P	P	P	M	K	
C <0,2%	0,25<C<0,4	C ≥ 0,45%	SCM	INOX	GGG	
10-15	8-14	8-14	7-11	7-12	7-14	m/min

M	HSSE	OX	40°	ISO 2 6H	E/1,5		DIN 371	DIN 376

EDP	TD	TP	LF	THLGTH	LU	DCON	DRVS	NOF	Type	DIN
48268138	3	0,5	56	4	18	3,5	2,7	3	1	371
48268144	4	0,7	63	5,6	21	4,5	3,4	3	1	371
48268149	5	0,8	70	6,4	25	6	4,9	3	1	371
48268155	6	1	80	8	30	6	4,9	3	1	371
48268161	8	1,25	90	10	35	8	6,2	3	1	371
48268169	10	1,5	100	12	39	10	8	3	1	371
48268179	12	1,75	110	14	-	9	7	4	2	376
48268191	14	2	110	16	-	11	9	4	2	376
48268202	16	2	110	16	-	12	9	4	2	376

S-LT-SFT

Threading | Cutting taps | Metric

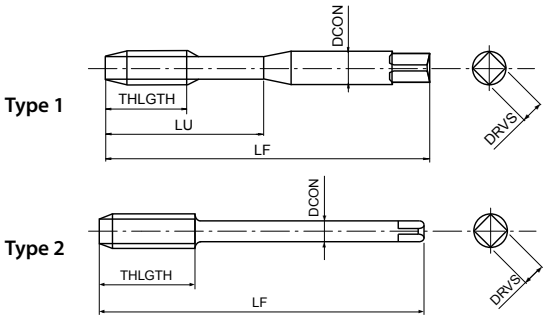

- HSSE spiral-flute cutting tap for blind holes
- Steam oxide treatment
- General purpose tapping in steels and stainless steels
- With long shank for long reach threading

P	P	P	P	M	K	
C <0,2%	0,25<C<0,4	C ≥ 0,45%	SCM	INOX	GGG	
10-15	8-14	8-14	7-11	7-12	7-14	m/min

M	HSSE	0X	40°	ISO 2 6H	C/2,5	

EDP	TD	TP	LF	THLGTH	LU	DCON	DRVS	NOF	Type
48275125	2	0,4	80	3,2	10	2,8	2,1	2	1
48275133	2,5	0,45	100	3,6	13	2,8	2,1	2	1
48275138	3	0,5	100	4	18	3,5	2,7	3	1
48275144	4	0,7	125	5,6	21	4,5	3,4	3	1
48275149	5	0,8	160	6,4	25	6	4,9	3	1
48275155	6	1	160	8	30	6	4,9	3	1
48275187	6	1	160	10	-	4,5	3,4	3	2
48275161	8	1,25	180	10	35	8	6,2	3	1
48275188	8	1,25	180	11	-	6	4,9	3	2
48275169	10	1,5	200	12	39	10	8	3	1
48275189	10	1,5	200	14	-	7	5,5	3	2
48275179	12	1,75	200	14	-	9	7	4	2
48275191	14	2	200	16	-	11	9	4	2
48275202	16	2	200	16	-	12	9	4	2
48275214	18	2,5	200	25	-	14	11	4	2
48275228	20	2,5	200	25	-	16	12	4	2

S-SFT-LH

Threading | Cutting taps | Metric

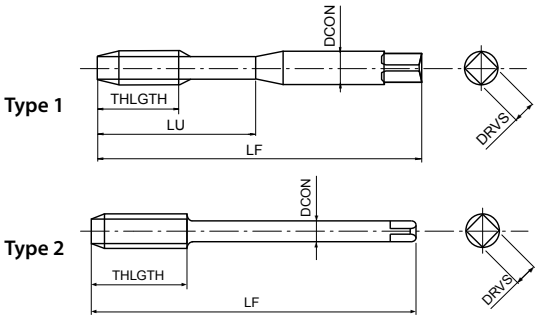

- HSSE spiral-flute cutting tap for blind holes
- Steam oxide treatment
- General purpose tapping in steels and stainless steels
- For left-hand threads

P	P	P	P	M	K	
C <0,2%	0,25<C<0,4	C ≥ 0,45%	SCM	INOX	GGG	
10-15	8-14	8-14	7-11	7-12	7-14	m/min

M | HSSE | 0X | 40° | ISO 2 6H | C/2,5 | DIN 371 | DIN 376 | LH

EDP	TD	TP	LF	THLGTH	LU	DCON	DRVS	NOF	Type	DIN
48276138	3	0,5	56	4	18	3,5	2,7	3	1	371
48276144	4	0,7	63	5,6	21	4,5	3,4	3	1	371
48276149	5	0,8	70	6,4	25	6	4,9	3	1	371
48276155	6	1	80	8	30	6	4,9	3	1	371
48276161	8	1,25	90	10	35	8	6,2	3	1	371
48276169	10	1,5	100	12	39	10	8	3	1	371
48276179	12	1,75	110	14	-	9	7	4	2	376
48276191	14	2	110	16	-	11	9	4	2	376
48276202	16	2	110	16	-	12	9	4	2	376
48276214	18	2,5	125	25	-	14	11	4	2	376
48276228	20	2,5	140	25	-	16	12	4	2	376
48276238	22	2,5	140	25	-	18	14,5	4	2	376
48276247	24	3	160	30	-	18	14,5	4	2	376

S-SFT-HB Weldon

Threading | Cutting taps | Metric

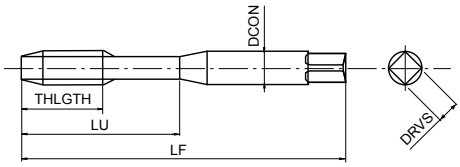

- HSSE spiral-flute cutting tap for blind holes
- Steam oxide treatment
- General purpose tapping in steels and stainless steels
- With Weldon shank

P	P	P	P	M	K	
C <0,2%	0,25<C<0,4	C ≥ 0,45%	SCM	INOX	GGG	
10-15	8-14	8-14	7-11	7-12	7-14	m/min

M | HSSE | 0X | 40° | ISO 2 6H | C/2,5 | DIN 371 | DIN 1835 | HB

EDP	TD	TP	LF	THLGTH	LU	DCON	DRVS	NOF	DIN
48277138	3	0,5	56	4	18	6	4,9	3	371/1835
48277144	4	0,7	63	5,6	21	6	4,9	3	371/1835
48277149	5	0,8	70	6,4	25	6	4,9	3	371/1835
48277155	6	1	80	8	30	6	4,9	3	371/1835
48277161	8	1,25	90	10	35	8	6,2	3	371/1835
48277169	10	1,5	100	12	39	10	8	3	371/1835
48277179	12	1,75	110	14	46	12	9	4	371/1835
48277191	14	2	110	16	49	14	11	4	371/1835
48277202	16	2	110	16	56	16	12	4	371/1835

S-SFT

Threading | Cutting taps | Metric Fine

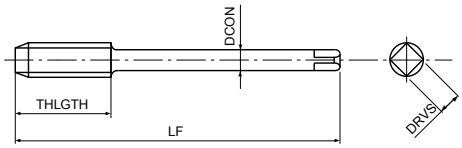

- HSSE spiral-flute cutting tap for blind holes
- Steam oxide treatment
- General purpose tapping in steels and stainless steels

P ◉	P ◉	P ◉	P ◉	M ◉	K ○	
C <0,2%	0,25<C<0,4	C ≥ 0,45%	SCM	INOX	GGG	
10-15	8-14	8-14	7-11	7-12	7-14	m/min

MF | HSSE | 0X | 40° | ISO 2 6H | C/2,5 | DIN 374

EDP	TD	TP	LF	THLGTH	DCON	DRVS	NOF	DIN
48223139	3	0,35	56	4	2,2	-	3	374
48223145	4	0,5	63	5,6	2,8	2,1	3	374
48223151	5	0,5	70	6,4	3,5	2,7	3	374
48223157	6	0,5	80	8	4,5	3,4	3	374
48223156	6	0,75	80	8	4,5	3,4	3	374
48223163	8	0,75	80	10	6	4,9	3	374
48223162	8	1	90	10	6	4,9	3	374
48223167	9	1	90	10	7	5,5	3	374
48223172	10	0,75	90	12	7	5,5	3	374
48223171	10	1	90	12	7	5,5	3	374
48223170	10	1,25	100	12	7	5,5	3	374
48223176	11	1	90	12	8	6,2	3	374
48223182	12	1	100	14	9	7	4	374
48223181	12	1,25	100	14	9	7	4	374
48223180	12	1,5	100	14	9	7	4	374
48223194	14	1	100	16	11	9	4	374
48223193	14	1,25	100	16	11	9	4	374
48223192	14	1,5	100	16	11	9	4	374
48223204	16	1	100	16	12	9	4	374
48223203	16	1,5	100	16	12	9	4	374
48223218	18	1	110	20	14	11	4	374
48223216	18	1,5	110	20	14	11	4	374
48223232	20	1	125	20	16	12	4	374
48223230	20	1,5	125	20	16	12	4	374
48223220	20	2	140	20	16	12	4	374
48223241	22	1	125	20	18	14,5	4	374
48223240	22	1,5	125	20	18	14,5	4	374
48223239	22	2	140	20	18	14,5	4	374
48223251	24	1	140	20	18	14,5	4	374
48223250	24	1,5	140	24	18	14,5	4	374
48223249	24	2	140	24	18	14,5	4	374

S-SFT 6G

Threading | Cutting taps | Metric Fine

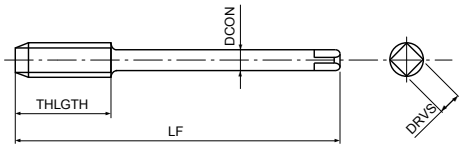

- HSSE spiral-flute cutting tap for blind holes
- Steam oxide treatment
- General purpose tapping in steels and stainless steels
- For 6G internal thread tolerance

P	P	P	P	M	K	
C <0,2%	0,25<C<0,4	C ≥ 0,45%	SCM	INOX	GGG	
10-15	8-14	8-14	7-11	7-12	7-14	m/min

MF | HSSE | 0X | 40° | ISO 2 6G | C/2,5 | DIN 374

EDP	TD	TP	Oversize	LF	THLGTH	DCON	DRVS	NOF	DIN
48269156	6	0,75	0,0220	80	8	4,5	3,4	3	374
48269163	8	0,75	0,0220	80	8	6	4,9	3	374
48269162	8	1	0,0260	90	10	6	4,9	3	374
48269171	10	1	0,0260	90	10	7	5,5	3	374
48269170	10	1,25	0,0280	100	12	7	5,5	3	374
48269182	12	1	0,0260	100	12	9	7	4	374
48269181	12	1,25	0,0280	100	12	9	7	4	374
48269180	12	1,5	0,0320	100	14	9	7	4	374
48269192	14	1,5	0,0320	100	16	11	9	4	374
48269203	16	1,5	0,0320	100	16	12	9	4	374
48269216	18	1,5	0,0320	110	16	14	11	4	374
48269230	20	1,5	0,0320	125	16	16	12	4	374
48269240	22	1,5	0,0320	125	16	18	14,5	4	374
48269250	24	1,5	0,0320	140	16	18	14,5	4	374

S-SFT

Threading | Cutting taps | G (BSP)

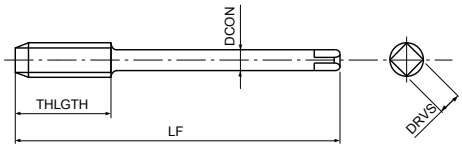

- HSSE spiral-flute cutting tap for blind holes
- Steam oxide treatment
- General purpose tapping in steels and stainless steels

P	P	P	P	M	K	
C <0,2%	0,25<C<0,4	C ≥ 0,45%	SCM	INOX	GGG	
10-15	8-14	8-14	7-11	7-12	7-14	m/min

G	HSSE	OX	40°	C/2,5		DIN 5156

EDP	TD	TP	LF	THLGTH	DCON	DRVS	NOF	DIN
48223900	1/8	28	90	20	7	5,5	3	5156
48223000	1/4	19	100	22	11	9	4	5156
48223100	3/8	19	100	22	12	9	4	5156
48223200	1/2	14	125	25	16	12	4	5156
48223300	5/8	14	125	25	18	14,5	4	5156
48223400	3/4	14	140	28	20	16	4	5156
48223500	7/8	14	150	28	22	18	4	5156
48223600	1	11	160	30	25	20	4	5156

S-SFT

Threading | Cutting taps | UNC

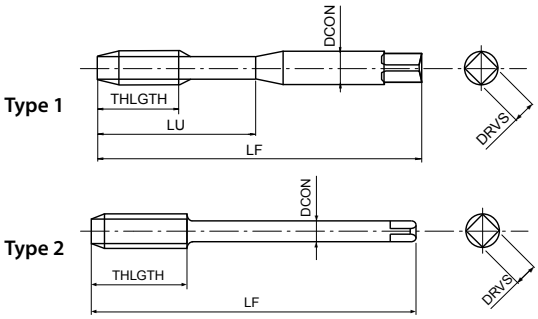

- HSSE spiral-flute cutting tap for blind holes
- Steam oxide treatment
- General purpose tapping in steels and stainless steels

P	P	P	P	M	K	
C <0,2%	0,25<C<0,4	C ≥ 0,45%	SCM	INOX	GGG	
10-15	8-14	8-14	7-11	7-12	7-14	m/min

UNC | HSSE | 0X | 40° | ANSI 2B | C/2,5 | DIN 2184-1 | DIN 2184-1

EDP	TD	TP	LF	THLGTH	LU	DCON	DRVS	NOF	Type	DIN
48223453	2	56	45	3,6	11	2,8	2,1	2	1	2184-1
48223455	3	48	50	3,6	13	2,8	2,1	2	1	2184-1
48223457	4	40	56	5,1	18	3,5	2,7	2	1	2184-1
48223459	5	40	56	5,1	18	3,5	2,7	3	1	2184-1
48223461	6	32	56	6,4	20	4	3	3	1	2184-1
48223464	8	32	63	6,4	21	4,5	3,4	3	1	2184-1
48223466	10	24	70	8,5	25	6	4,9	3	1	2184-1
48223468	12	24	80	8,5	30	6	4,9	3	1	2184-1
48223471	1/4	20	80	10,2	30	7	5,5	3	1	2184-1
48223474	5/16	18	90	11,3	35	8	6,2	3	1	2184-1
48223479	3/8	16	100	12,7	39	10	8	3	1	2184-1
48223484	7/16	14	100	14,5	-	8	6,2	3	2	2184-1
48223489	1/2	13	110	15,6	-	9	7	4	2	2184-1
48223494	9/16	12	110	16,9	-	11	9	4	2	2184-1
48223501	5/8	11	110	18,5	-	12	9	4	2	2184-1
48223515	3/4	10	125	25,4	-	14	11	4	2	2184-1
48223526	7/8	9	140	28,2	-	18	14,5	4	2	2184-1
48223538	1	8	160	31,8	-	18	14,5	4	2	2184-1
48223997	1 1/8	7	180	36	-	22	18	4	2	2184-1
48223998	1 1/4	7	180	36	-	22	18	4	2	2184-1
48223999	1 1/2	6	200	42	-	28	22	4	2	2184-1

S-SFT

Threading | Cutting taps | UNF

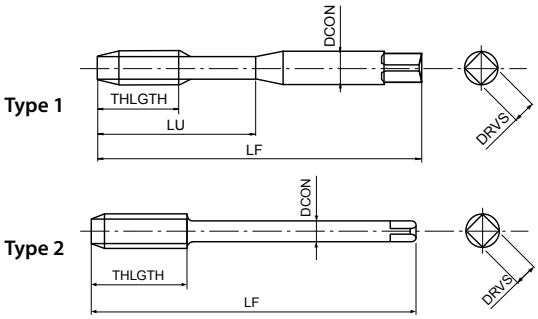

- HSSE spiral-flute cutting tap for blind holes
- Steam oxide treatment
- General purpose tapping in steels and stainless steels

P	P	P	P	M	K	
C <0,2%	0,25<C<0,4	C ≥ 0,45%	SCM	INOX	GGG	
10-15	8-14	8-14	7-11	7-12	7-14	m/min

UNF | HSSE | 0X | 40° | ANSI 2B | C/2,5 | DIN 2184-1 | DIN 2184-1

EDP	TD	TP	LF	THLGTH	LU	DCON	DRVS	NOF	Type	DIN
48223454	2	64	45	3,6	11	2,8	2,1	2	1	2184-1
48223456	3	56	50	3,6	13	2,8	2,1	2	1	2184-1
48223458	4	48	56	5,1	18	3,5	2,7	2	1	2184-1
48223460	5	44	56	5,1	18	3,5	2,7	3	1	2184-1
48223462	6	40	56	6,4	20	4	3	3	1	2184-1
48223465	8	36	63	6,4	21	4,5	3,4	3	1	2184-1
48223467	10	32	70	8,5	25	6	4,9	3	1	2184-1
48223469	12	28	80	8,5	30	6	4,9	3	1	2184-1
48223472	1/4	28	80	10,2	30	7	5,5	3	1	2184-1
48223476	5/16	24	90	11,3	35	8	6,2	3	1	2184-1
48223481	3/8	24	90	12,7	35	10	8	3	1	2184-1
48223486	7/16	20	100	14,5	-	8	6,2	3	2	2184-1
48223491	1/2	20	100	15,6	-	9	7	4	2	2184-1
48223496	9/16	18	100	16,9	-	11	9	4	2	2184-1
48223504	5/8	18	100	18,5	-	12	9	4	2	2184-1
48223517	3/4	16	110	25,4	-	14	11	4	2	2184-1
48223528	7/8	14	125	28,2	-	18	14,5	4	2	2184-1
48223539	1	12	140	31,8	-	18	14,5	4	2	2184-1

S-SFT

Threading | Cutting taps | BSW

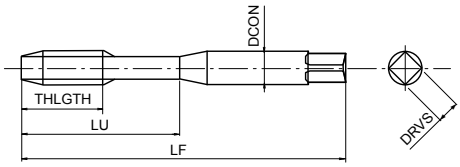

- HSSE spiral-flute cutting tap for blind holes
- Steam oxide treatment
- General purpose tapping in steels and stainless steels

P	P	P	P	M	K	
C <0,2%	0,25<C<0,4	C ≥ 0,45%	SCM	INOX	GGG	
10-15	8-14	8-14	7-11	7-12	7-14	m/min

BSW | HSSE | OX | 40° | MED | C/2,5 | DIN 2184-1

EDP	TD	TP	LF	THLGTH	LU	DCON	DRVS	NOF	DIN
48223702	1/8	40	56	7	18	3,5	2,7	3	2184-1
48223704	3/16	24	70	10	25	6	4,9	3	2184-1
48223706	1/4	20	80	13	30	7	5,5	3	2184-1
48223707	5/16	18	90	14	35	8	6,2	3	2184-1
48223708	3/8	16	100	16	39	10	8	3	2184-1
48223709	7/16	14	100	22	-	8	6,2	3	2184-1
48223710	1/2	12	110	25	-	9	7	4	2184-1
48223712	5/8	11	110	27	-	12	9	4	2184-1
48223713	3/4	10	125	30	-	14	11	4	2184-1
48223714	7/8	9	140	32	-	18	14,5	4	2184-1
48223715	1	8	160	36	-	18	14,5	4	2184-1

S-SFT

Threading | Cutting taps | BSF

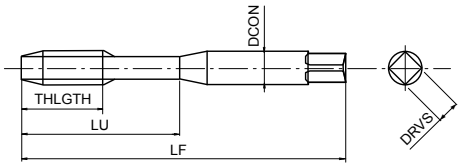

- HSSE spiral-flute cutting tap for blind holes
- Steam oxide treatment
- General purpose tapping in steels and stainless steels

P	P	P	P	M	K	
C <0,2%	0,25<C<0,4	C ≥ 0,45%	SCM	INOX	GGG	
10-15	8-14	8-14	7-11	7-12	7-14	m/min

BSF | HSSE | 0X | 40° | MED | C/2,5 | DIN 2184-1

EDP	TD	TP	LF	THLGTH	LU	DCON	DRVS	NOF	DIN
48223731	1/4	26	80	17	30	7	5,5	3	2184-1
48223732	5/16	22	90	17	35	8	6,2	3	2184-1
48223733	3/8	20	100	18	39	10	8	3	2184-1
48223734	7/16	18	100	22	-	8	6,2	3	2184-1
48223735	1/2	16	100	22	-	9	7	4	2184-1
48223737	5/8	14	110	27	-	12	9	4	2184-1
48223739	3/4	12	125	27	-	14	11	4	2184-1
48223742	1	10	160	36	-	18	14,5	4	2184-1

S-SFT

Threading | Cutting taps | BA

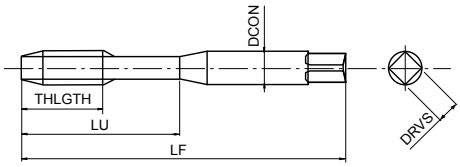

- HSSE spiral-flute cutting tap for blind holes
- Steam oxide treatment
- General purpose tapping in steels and stainless steels

P	P	P	P	M	K	
C <0,2%	0,25<C<0,4	C ≥ 0,45%	SCM	INOX	GGG	
10-15	8-14	8-14	7-11	7-12	7-14	m/min

BA (BS93) | HSSE | 0X | 40° | C/2,5

EDP	TD	LF	THLGTH	LU	DCON	DRVS	NOF
48223910	0	66	19	30	6,3	5	3
48223911	1	62	17	26	5,6	4,5	3
48223912	2	58	16	25	5	4	3
48223913	3	53	13	21	4,5	3,55	3
48223914	4	50	13	20	3,55	2,8	3
48223915	5	48	11	18	3,15	2,5	3
48223916	6	44,5	9,5	-	2,8	2,24	2
48223917	7	44,5	9,5	-	2,8	2,24	2
48223918	8	44,5	9,5	-	2,8	2,24	2
48223919	9	41	8	-	2,5	2	2
48223920	10	41	8	-	2,5	2	2
48223921	11	41	8	-	2,5	2	2
48223922	12	40	7	-	2,5	2	2

S-TPT

Threading | Cutting taps | RC (BSPT)

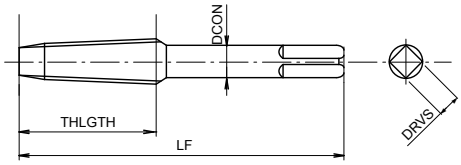

- HSSE straight flute cutting tap for through & blind holes
- Steam oxide treatment
- For general steels and aluminium
- RC (BSPT) tapered 1:16

P	P	P	P	N	N	
C <0,2%	0,25<C<0,4	C ≥ 0,45%	SCM	Al	AC, ADC	
5-10	5-10	5-10	5-10	5-10	10-15	m/min

Rc (PT) | HSSE | OX | C/2,5 | DIN 5156

EDP	TD	TP	LF	THLGTH	DCON	DRVS	NOF	DIN
48281384	1/8	28	90	15	7	5,5	4	5156
48281394	1/4	19	100	19	11	9	4	5156
48281404	3/8	19	110	21	12	9	4	5156
48281414	1/2	14	125	26	16	12	4	5156
48281434	3/4	14	140	28	20	16	4	5156
48281454	1	11	160	33	25	20	4	5156

S-POT

Threading | Cutting taps | Metric

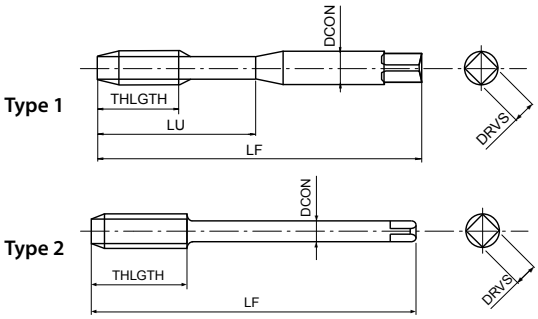

- HSSE spiral-point cutting tap for through holes
- Steam oxide treatment
- General purpose tapping in steels and stainless steels

P	P	P	P	M	K	
C <0,2%	0,25<C<0,4	C ≥ 0,45%	SCM	INOX	GGG	
15-24	10-15	10-15	8-13	8-16	10-15	m/min

M | HSSE | 0X | ISO 2 6H | ISO 1 5H<M1,4 | B/4 | DIN 371 | DIN 376

EDP	TD	TP	LF	THLGTH	LU	DCON	DRVS	NOF	Type	DIN
48224111	1	0,25	40	5	-	2,5	2,1	2	1	371
48224112	1,1	0,25	40	5	-	2,5	2,1	2	1	371
48224113	1,2	0,25	40	5	-	2,5	2,1	2	1	371
48224115	1,4	0,3	40	7	-	2,5	2,1	2	1	371
48224118	1,6	0,35	40	8	-	2,5	2,1	2	1	371
48224119	1,7	0,35	40	8	-	2,5	2,1	2	1	371
48224120	1,8	0,35	40	8	-	2,5	2,1	2	1	371
48224125	2	0,4	45	8	-	2,8	2,1	2	1	371
48224127	2,2	0,45	45	9	-	2,8	2,1	2	1	371
48224128	2,3	0,4	45	9	-	2,8	2,1	2	1	371
48224133	2,5	0,45	50	9	-	2,8	2,1	2	1	371
48224136	2,6	0,45	50	9	-	2,8	2,1	2	1	371
48224138	3	0,5	56	11	18	3,5	2,7	3	1	371
48224142	3,5	0,6	56	12	20	4	3	3	1	371
48224144	4	0,7	63	13	21	4,5	3,4	3	1	371
48224147	4,5	0,75	70	16	25	6	4,9	3	1	371
48224149	5	0,8	70	16	25	6	4,9	3	1	371
48224152	5,5	0,9	80	17	30	6	4,9	3	1	371
48224155	6	1	80	19	30	6	4,9	3	1	371
48224158	7	1	80	19	30	7	5,5	3	1	371
48224161	8	1,25	90	22	35	8	6,2	3	1	371
48224165	9	1,25	90	22	35	9	7	3	1	371
48224169	10	1,5	100	24	39	10	8	3	1	371
48224140	3	0,5	56	11	-	2,2	-	3	2	376
48224185	4	0,7	63	13	-	2,8	2,1	3	2	376
48224150	5	0,8	70	16	-	3,5	2,7	3	2	376
48224187	6	1	80	19	-	4,5	3,4	3	2	376
48224159	7	1	80	19	-	5,5	4,3	3	2	376
48224188	8	1,25	90	22	-	6	4,9	3	2	376
48224166	9	1,25	90	22	-	7	5,5	3	2	376
48224189	10	1,5	100	24	-	7	5,5	3	2	376
48224175	11	1,5	100	24	-	8	6,2	3	2	376
48224179	12	1,75	110	28	-	9	7	3	2	376
48224191	14	2	110	30	-	11	9	3	2	376
48224202	16	2	110	32	-	12	9	3	2	376
48224214	18	2,5	125	34	-	14	11	3	2	376
48224228	20	2,5	140	34	-	16	12	3	2	376
48224238	22	2,5	140	34	-	18	14,5	3	2	376
48224247	24	3	160	38	-	18	14,5	3	2	376

S-POT 6G

Threading | Cutting taps | Metric

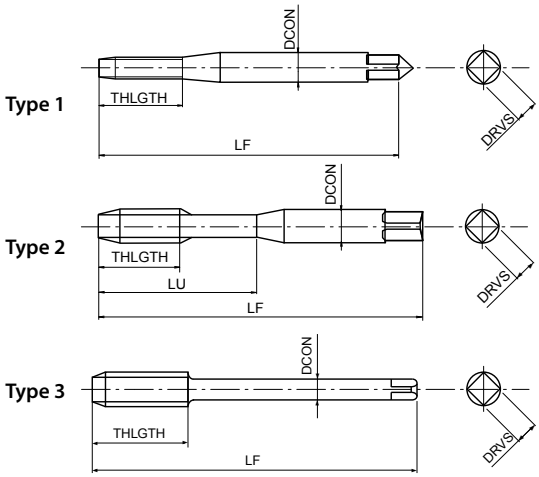

- HSSE spiral-point cutting tap for through holes
- Steam oxide treatment
- General purpose tapping in steels and stainless steels
- For 6G internal thread tolerance

P	P	P	P	M	K	
C <0,2%	0,25<C<0,4	C ≥ 0,45%	SCM	INOX	GGG	
15-24	10-15	10-15	8-13	8-16	10-15	m/min

M | HSSE | 0X | ISO 3 6G | B/4 | DIN 371 | DIN 376

EDP	TD	TP	Oversize	LF	THLGTH	LU	DCON	DRVS	NOF	Type	DIN
48272125	2	0,4	0,0190	45	8	-	2,8	2,1	2	1	371
48272133	2,5	0,45	0,0200	50	9	-	2,8	2,1	2	1	371
48272138	3	0,5	0,0200	56	11	18	3,5	2,7	3	2	371
48272144	4	0,7	0,0220	63	13	21	4,5	3,4	3	2	371
48272149	5	0,8	0,0240	70	16	25	6	4,9	3	2	371
48272155	6	1	0,0260	80	19	30	6	4,9	3	2	371
48272161	8	1,25	0,0280	90	22	35	8	6,2	3	2	371
48272169	10	1,5	0,0320	100	24	39	10	8	3	2	371
48272179	12	1,75	0,0340	110	28	-	9	7	3	3	376
48272191	14	2	0,0380	110	30	-	11	9	3	3	376
48272202	16	2	0,0380	110	32	-	12	9	3	3	376

S-POT 7G

Threading | Cutting taps | Metric

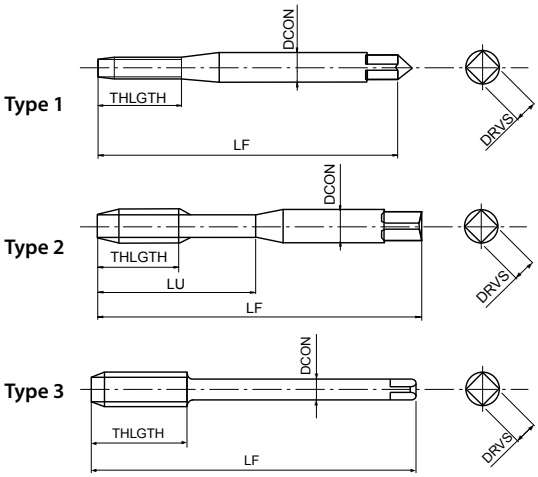

- HSSE spiral-point cutting tap for through holes
- Steam oxide treatment
- General purpose tapping in steels and stainless steels
- For 7G internal thread tolerance

P	P	P	P	M	K	
C <0,2%	0,25<C<0,4	C ≥ 0,45%	SCM	INOX	GGG	
15-24	10-15	10-15	8-13	8-16	10-15	m/min

M | HSSE | OX | 7G | B/4 | DIN 371 | DIN 376

EDP	TD	TP	Oversize	LF	THLGTH	LU	DCON	DRVS	NOF	Type	DIN
48273125	2	0,4	0,0380	45	8	-	2,8	2,1	2	1	371
48273133	2,5	0,45	0,0400	50	9	-	2,8	2,1	2	1	371
48273138	3	0,5	0,0400	56	11	18	3,5	2,7	3	2	371
48273144	4	0,7	0,0440	63	13	21	4,5	3,4	3	2	371
48273149	5	0,8	0,0480	70	16	25	6	4,9	3	2	371
48273155	6	1	0,0520	80	19	30	6	4,9	3	2	371
48273161	8	1,25	0,0560	90	22	35	8	6,2	3	2	371
48273169	10	1,5	0,0640	100	24	39	10	8	3	2	371
48273179	12	1,75	0,0680	110	28	-	9	7	3	3	376
48273191	14	2	0,0760	110	30	-	11	9	3	3	376
48273202	16	2	0,0760	110	32	-	12	9	3	3	376

S-POT +0.1

Threading | Cutting taps | Metric

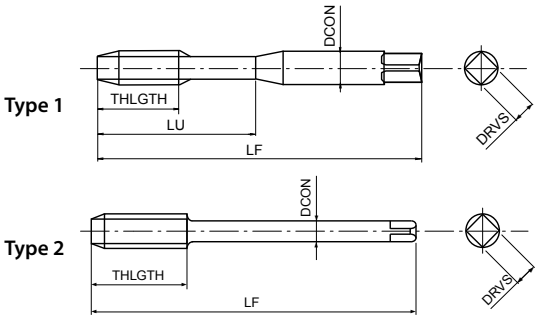

- HSSE spiral-point cutting tap for through holes
- Steam oxide treatment
- General purpose tapping in steels and stainless steels
- Oversized tap for 6H +0,1mm thread tolerance

P	P	P	P	M	K	
C <0,2%	0,25<C<0,4	C ≥ 0,45%	SCM	INOX	GGG	
15-24	10-15	10-15	8-13	8-16	10-15	m/min

M | HSSE | 0X | 6H +0.1 | B/4 | DIN 371 | DIN 376

EDP	TD	TP	LF	THLGTH	LU	DCON	DRVS	NOF	Type	DIN
48271138	3	0,5	56	11	18	3,5	2,7	3	1	371
48271144	4	0,7	63	13	21	4,5	3,4	3	1	371
48271149	5	0,8	70	16	25	6	4,9	3	1	371
48271155	6	1	80	19	30	6	4,9	3	1	371
48271161	8	1,25	90	22	35	8	6,2	3	1	371
48271169	10	1,5	100	24	39	10	8	3	1	371
48271179	12	1,75	110	28	-	9	7	3	2	376
48271191	14	2	110	30	-	11	9	3	2	376
48271202	16	2	110	32	-	12	9	3	2	376

S-LT-POT

Threading | Cutting taps | Metric

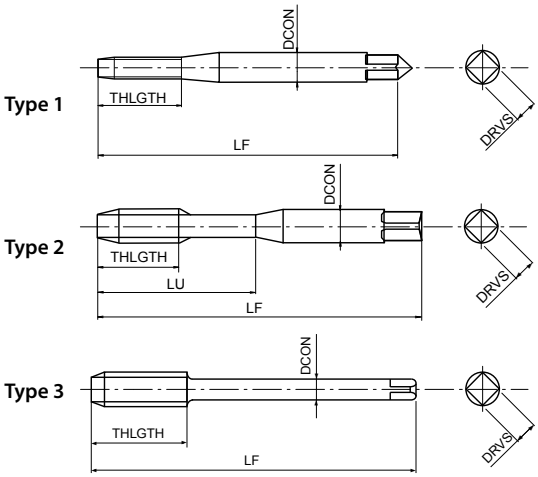

- HSSE spiral-point cutting tap for through holes
- Steam oxide treatment
- General purpose tapping in steels and stainless steels
- With long shank for long reach threading

P	P	P	P	M	K	
C <0,2%	0,25<C<0,4	C ≥ 0,45%	SCM	INOX	GGG	
15-24	10-15	10-15	8-13	8-16	10-15	m/min

M | HSSE | 0X | ISO 2 6H | B/4

EDP	TD	TP	LF	THLGTH	LU	DCON	DRVS	NOF	Type
48278125	2	0,4	80	8	-	2,8	2,1	2	1
48278133	2,5	0,45	100	9	-	2,8	2,1	2	1
48278138	3	0,5	100	11	18	3,5	2,7	3	2
48278144	4	0,7	125	13	21	4,5	3,4	3	2
48278149	5	0,8	160	16	25	6	4,9	3	2
48278155	6	1	160	19	30	6	4,9	3	2
48278187	6	1	160	19	-	4,5	3,4	3	2
48278161	8	1,25	180	22	35	8	6,2	3	2
48278188	8	1,25	180	22	-	6	4,9	3	2
48278169	10	1,5	200	24	39	10	8	3	2
48278189	10	1,5	200	24	-	7	5,5	3	2
48278179	12	1,75	200	28	-	9	7	3	3
48278191	14	2	200	30	-	11	9	3	3
48278202	16	2	200	32	-	12	9	3	3
48278214	18	2,5	200	34	-	14	11	3	3
48278228	20	2,5	200	34	-	16	12	3	3

S-POT-LH

Threading | Cutting taps | Metric

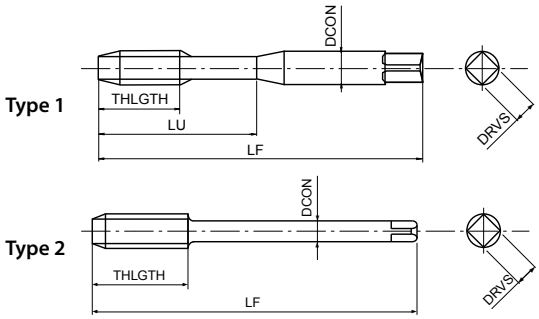

- HSSE spiral-point cutting tap for through holes
- Steam oxide treatment
- General purpose tapping in steels and stainless steels
- For left-hand threads

P	P	P	P	M	K	
C <0,2%	0,25<C<0,4	C ≥ 0,45%	SCM	INOX	GGG	
15-24	10-15	10-15	8-13	8-16	10-15	m/min

M | HSSE | 0X | ISO 2 6H | B/4 | DIN 371 | DIN 376 | LH

EDP	TD	TP	LF	THLGTH	LU	DCON	DRVS	NOF	Type	DIN
48280138	3	0,5	56	11	18	3,5	2,7	3	1	371
48280144	4	0,7	63	13	21	4,5	3,4	3	1	371
48280149	5	0,8	70	16	25	6	4,9	3	1	371
48280155	6	1	80	19	30	6	4,9	3	1	371
48280161	8	1,25	90	22	35	8	6,2	3	1	371
48280169	10	1,5	100	24	39	10	8	3	1	371
48280179	12	1,75	110	28	-	9	7	3	2	376
48280191	14	2	110	30	-	11	9	3	2	376
48280202	16	2	110	32	-	12	9	3	2	376
48280214	18	2,5	125	34	-	14	11	3	2	376
48280228	20	2,5	140	34	-	16	12	3	2	376
48280238	22	2,5	140	34	-	18	14,5	3	2	376
48280247	24	3	160	38	-	18	14,5	3	2	376

S-POT-HB Weldon

Threading | Cutting taps | Metric

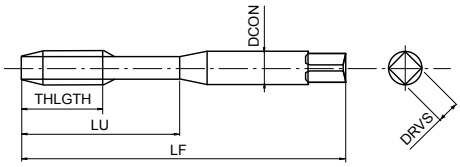

- HSSE spiral-point cutting tap for through holes
- Steam oxide treatment
- General purpose tapping in steels and stainless steels
- With Weldon shank

P	P	P	P	M	K	
C <0,2%	0,25<C<0,4	C ≥ 0,45%	SCM	INOX	GGG	
15-24	10-15	10-15	8-13	8-16	10-15	m/min

M | HSSE | 0X | ISO 2 6H | B/4 | DIN 371 | DIN 1835 | HB

EDP	TD	TP	LF	THLGTH	LU	DCON	DRVS	NOF	DIN
48279138	3	0,5	56	11	18	6	4,9	3	371/1835
48279144	4	0,7	63	13	21	6	4,9	3	371/1835
48279149	5	0,8	70	16	25	6	4,9	3	371/1835
48279155	6	1	80	19	30	6	4,9	3	371/1835
48279161	8	1,25	90	22	35	8	6,2	3	371/1835
48279169	10	1,5	100	24	39	10	8	3	371/1835
48279179	12	1,75	110	28	46	12	9	3	371/1835
48279191	14	2	110	30	49	14	11	3	371/1835
48279202	16	2	110	32	56	16	12	3	371/1835

S-POT

Threading | Cutting taps | Metric Fine

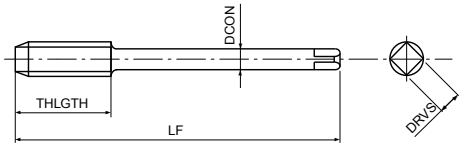

- HSSE spiral-point cutting tap for through holes
- Steam oxide treatment
- General purpose tapping in steels and stainless steels

P	P	P	P	M	K	
C <0,2%	0,25<C<0,4	C ≥ 0,45%	SCM	INOX	GGG	
15-24	10-15	10-15	8-13	8-16	10-15	m/min

MF | HSSE | 0X | ISO 2 6H | B/4 | DIN 374

EDP	TD	TP	LF	THLGTH	DCON	DRVS	NOF	DIN
48224139	3	0,35	56	9	2,2	-	3	374
48224145	4	0,5	63	10	2,8	2,1	3	374
48224151	5	0,5	70	12	3,5	2,7	3	374
48224157	6	0,5	80	14	4,5	3,4	3	374
48224156	6	0,75	80	14	4,5	3,4	3	374
48224163	8	0,75	80	18	6	4,9	3	374
48224162	8	1	90	22	6	4,9	3	374
48224167	9	1	90	22	7	5,5	3	374
48224172	10	0,75	90	20	7	5,5	3	374
48224171	10	1	90	20	7	5,5	3	374
48224170	10	1,25	100	24	7	5,5	3	374
48224176	11	1	90	20	8	6,2	3	374
48224182	12	1	100	22	9	7	3	374
48224181	12	1,25	100	22	9	7	3	374
48224180	12	1,5	100	22	9	7	3	374
48224194	14	1	100	22	11	9	3	374
48224193	14	1,25	100	22	11	9	3	374
48224192	14	1,5	100	22	11	9	3	374
48224204	16	1	100	22	12	9	3	374
48224203	16	1,5	100	22	12	9	3	374
48224218	18	1	110	25	14	11	3	374
48224216	18	1,5	110	25	14	11	3	374
48224232	20	1	125	25	16	12	3	374
48224230	20	1,5	125	25	16	12	3	374
48224220	20	2	140	34	16	12	3	374
48224241	22	1	125	25	18	14,5	3	374
48224240	22	1,5	125	25	18	14,5	3	374
48224239	22	2	140	34	18	14,5	3	374
48224251	24	1	140	28	18	14,5	3	374
48224250	24	1,5	140	28	18	14,5	3	374
48224249	24	2	140	28	18	14,5	3	374

S-POT 6G

Threading | Cutting taps | Metric Fine

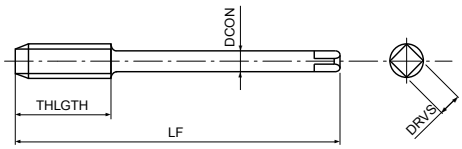

- HSSE spiral-point cutting tap for through holes
- Steam oxide treatment
- General purpose tapping in steels and stainless steels
- For 6G internal thread tolerance

P	P	P	P	M	K	
C <0,2%	0,25<C<0,4	C ≥ 0,45%	SCM	INOX	GGG	
15-24	10-15	10-15	8-13	8-16	10-15	m/min

MF | HSSE | 0X | ISO 2 6G | B/4 | DIN 374

EDP	TD	TP	Oversize	LF	THLGTH	DCON	DRVS	NOF	DIN
48272156	6	0,75	0,0220	80	14	4,5	3,4	3	374
48272163	8	0,75	0,0220	80	18	6	4,9	3	374
48272162	8	1	0,0260	90	22	6	4,9	3	374
48272171	10	1	0,0260	90	20	7	5,5	3	374
48272170	10	1,25	0,0280	100	24	7	5,5	3	374
48272182	12	1	0,0260	100	22	9	7	3	374
48272181	12	1,25	0,0280	100	22	9	7	3	374
48272180	12	1,5	0,0320	100	22	9	7	3	374
48272192	14	1,5	0,0320	100	22	11	9	3	374
48272203	16	1,5	0,0320	100	22	12	9	3	374
48272216	18	1,5	0,0320	110	25	14	11	3	374
48272230	20	1,5	0,0320	125	25	16	12	3	374
48272240	22	1,5	0,0320	125	25	18	14,5	3	374
48272250	24	1,5	0,0320	140	28	18	14,5	3	374

S-POT

Threading | Cutting taps | G (BSP)

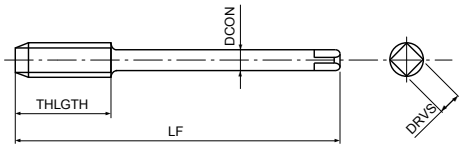

- HSSE spiral-point cutting tap for through holes
- Steam oxide treatment
- General purpose tapping in steels and stainless steels

P	P	P	P	M	K	
C <0,2%	0,25<C<0,4	C ≥ 0,45%	SCM	INOX	GGG	
15-24	10-15	10-15	8-13	8-16	10-15	m/min

G | HSSE | OX | B/4 | DIN 5156

EDP	TD	TP	LF	THLGTH	DCON	DRVS	NOF	DIN
48224900	1/8	28	90	20	7	5,5	3	5156
48224000	1/4	19	100	22	11	9	3	5156
48224100	3/8	19	100	22	12	9	3	5156
48224200	1/2	14	125	25	16	12	3	5156
48224300	5/8	14	125	25	18	14,5	3	5156
48224400	3/4	14	140	28	20	16	4	5156
48224500	7/8	14	150	28	22	18	4	5156
48224600	1	11	160	30	25	20	4	5156

S-POT

Threading | Cutting taps | UNC

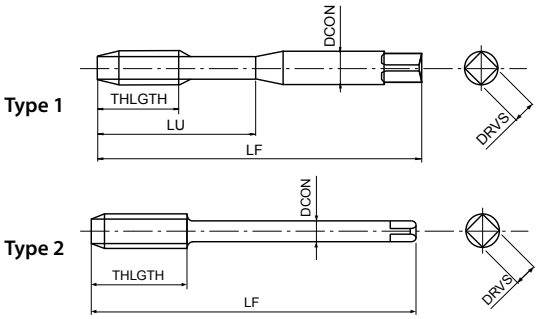

- HSSE spiral-point cutting tap for through holes
- Steam oxide treatment
- General purpose tapping in steels and stainless steels

P	P	P	P	M	K	
C <0,2%	0,25<C<0,4	C ≥ 0,45%	SCM	INOX	GGG	
15-24	10-15	10-15	8-13	8-16	10-15	m/min

UNC | HSSE | OX | ANSI 2B | B/4 | DIN 2184-1 | DIN 2184-1

EDP	TD	TP	LF	THLGTH	LU	DCON	DRVS	NOF	Type	DIN
48224453	2	56	45	-	9	2,8	2,1	2	1	2184-1
48224455	3	48	50	-	9	2,8	2,1	2	1	2184-1
48224457	4	40	56	11	18	3,5	2,7	2	1	2184-1
48224459	5	40	56	11	18	3,5	2,7	3	1	2184-1
48224461	6	32	56	12	20	4	3	3	1	2184-1
48224464	8	32	63	13	21	4,5	3,4	3	1	2184-1
48224466	10	24	70	16	25	6	4,9	3	1	2184-1
48224468	12	24	80	17	30	6	4,9	3	1	2184-1
48224471	1/4	20	80	19	30	7	5,5	3	1	2184-1
48224474	5/16	18	90	22	35	8	6,2	3	1	2184-1
48224479	3/8	16	100	24	39	10	8	3	1	2184-1
48224484	7/16	14	100	24	-	8	6,2	3	2	2184-1
48224489	1/2	13	110	28	-	9	7	3	2	2184-1
48224494	9/16	12	110	30	-	11	9	3	2	2184-1
48224501	5/8	11	110	32	-	12	9	3	2	2184-1
48224515	3/4	10	125	34	-	14	11	3	2	2184-1
48224526	7/8	9	140	34	-	18	14,5	3	2	2184-1
48224538	1	8	160	38	-	18	14,5	3	2	2184-1

S-POT

Threading | Cutting taps | UNF

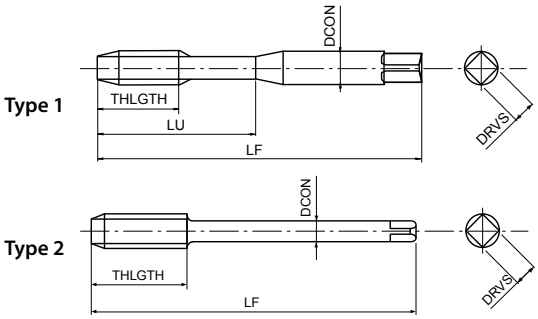

- HSSE spiral-point cutting tap for through holes
- Steam oxide treatment
- General purpose tapping in steels and stainless steels

P	P	P	P	M	K	
C <0,2%	0,25<C<0,4	C ≥ 0,45%	SCM	INOX	GGG	
15-24	10-15	10-15	8-13	8-16	10-15	m/min

UNF | HSSE | 0X | ANSI 2B | B/4 | DIN 2184-1 | DIN 2184-1

EDP	TD	TP	LF	THLGTH	LU	DCON	DRVS	NOF	Type	DIN
48224454	2	64	45	-	9	2,8	2,1	2	1	2184-1
48224456	3	56	50	-	9	2,8	2,1	2	1	2184-1
48224458	4	48	56	11	18	3,5	2,7	2	1	2184-1
48224460	5	44	56	11	18	3,5	2,7	3	1	2184-1
48224462	6	40	56	12	20	4	3	3	1	2184-1
48224465	8	36	63	13	21	4,5	3,4	3	1	2184-1
48224467	10	32	70	16	25	6	4,9	3	1	2184-1
48224469	12	28	80	17	30	6	4,9	3	1	2184-1
48224472	1/4	28	80	19	30	7	5,5	3	1	2184-1
48224476	5/16	24	90	22	35	8	6,2	3	1	2184-1
48224481	3/8	24	90	20	35	10	8	3	1	2184-1
48224486	7/16	20	100	24	-	8	6,2	3	2	2184-1
48224491	1/2	20	100	22	-	9	7	3	2	2184-1
48224496	9/16	18	100	22	-	11	9	3	2	2184-1
48224504	5/8	18	100	22	-	12	9	3	2	2184-1
48224517	3/4	16	110	25	-	14	11	3	2	2184-1
48224528	7/8	14	125	25	-	18	14,5	3	2	2184-1
48224539	1	12	140	28	-	18	14,5	3	2	2184-1

S-POT

Threading | Cutting taps | BSW

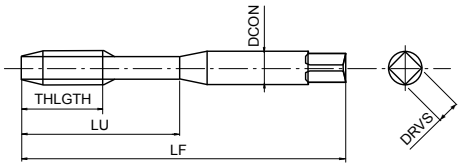

- HSSE spiral-point cutting tap for through holes
- Steam oxide treatment
- General purpose tapping in steels and stainless steels

P	P	P	P	M	K	
C <0,2%	0,25<C<0,4	C ≥ 0,45%	SCM	INOX	GGG	
15-24	10-15	10-15	8-13	8-16	10-15	m/min

BSW | HSSE | OX | MED | B/4 | DIN 2184-1

EDP	TD	TP	LF	THLGTH	LU	DCON	DRVS	NOF	DIN
48272702	1/8	40	56	11	18	3,5	2,7	3	2184-1
48272704	3/16	24	70	16	25	6	4,9	3	2184-1
48272706	1/4	20	80	19	30	7	5,5	3	2184-1
48272707	5/16	18	90	22	35	8	6,2	3	2184-1
48272708	3/8	16	100	24	39	10	8	3	2184-1
48272709	7/16	14	100	24	-	8	6,2	3	2184-1
48272710	1/2	12	110	28	-	9	7	3	2184-1
48272712	5/8	11	110	32	-	12	9	3	2184-1
48272713	3/4	10	125	34	-	14	11	3	2184-1
48272714	7/8	9	140	34	-	18	14,5	3	2184-1
48272715	1	8	160	38	-	18	14,5	3	2184-1

S-POT

Threading | Cutting taps | BSF

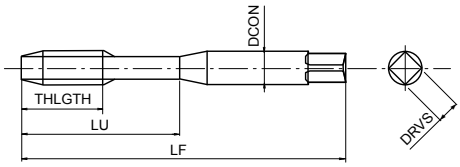

- HSSE spiral-point cutting tap for through holes
- Steam oxide treatment
- General purpose tapping in steels and stainless steels

P	P	P	P	M	K	
C <0,2%	0,25<C<0,4	C ≥ 0,45%	SCM	INOX	GGG	
15-24	10-15	10-15	8-13	8-16	10-15	m/min

BSF | HSSE | OX | MED | B/4 | DIN 2184-1

EDP	TD	TP	LF	THLGTH	LU	DCON	DRVS	NOF	DIN
48272731	1/4	26	80	19	30	7	5,5	3	2184-1
48272732	5/16	22	90	22	35	8	6,2	3	2184-1
48272733	3/8	20	100	24	39	10	8	3	2184-1
48272734	7/16	18	100	24	-	8	6,2	3	2184-1
48272735	1/2	16	100	22	-	9	7	3	2184-1
48272737	5/8	14	110	32	-	12	9	3	2184-1
48272739	3/4	12	125	34	-	14	11	3	2184-1
48272742	1	10	160	38	-	18	14,5	3	2184-1

S-POT

Threading | Cutting taps | BA

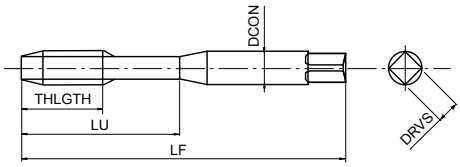

- HSSE spiral-point cutting tap for through holes
- Steam oxide treatment
- General purpose tapping in steels and stainless steels

P	P	P	P	M	K	
C <0,2%	0,25<C<0,4	C ≥ 0,45%	SCM	INOX	GGG	
15-24	10-15	10-15	8-13	8-16	10-15	m/min

BA (BS93) | HSSE | 0X | B/4

EDP	TD	LF	THLGTH	LU	DCON	DRVS	NOF
48272910	0	66	19	30	6,3	5	3
48272911	1	62	17	26	5,6	4,5	3
48272912	2	58	16	25	5	4	3
48272913	3	53	13	21	4,5	3,55	3
48272914	4	50	13	20	3,55	2,8	3
48272915	5	48	11	18	3,15	2,5	3
48272916	6	44,5	9,5	-	2,8	2,24	2
48272917	7	44,5	9,5	-	2,8	2,24	2
48272918	8	44,5	9,5	-	2,8	2,24	2
48272919	9	41	8	-	2,5	2	2
48272920	10	41	8	-	2,5	2	2
48272921	11	41	8	-	2,5	2	2
48272922	12	40	7	-	2,5	2	2

www.osgeurope.com

SWEDEN

Branch office of OSG SCANDINAVIA
Singelgatan 7
212 28 Malmö
Sweden
Tel: +46 40 41 22 55
osg@osg-scandinavia.com

OSG SCANDINAVIA

(For Scandinavian countries)
Langebjergvaenget 16
4000 Roskilde
Denmark
Tel: +45 46 75 65 55
osg@osg-scandinavia.com

OSG NETHERLANDS

Bedrijfsweg 5
3481 MG Harmelen
The Netherlands
Tel: +31 348 44 2764
Fax: +31 348 44 2144
info@osg-nl.com

OSG UK

Kelsey Close, Attleborough Fields Ind Est,
CV11 6RS, Nuneaton
United Kingdom
Tel: +44 1827 720 013
sales@osg-uk.com

OSG EUROPE LOGISTICS

Avenue Lavoisier 1
B-1300 Z.I. Wavre - Nord
Belgium
Tel: +32 10 23 05 07
Fax: +32 10 23 05 51
info@osgeurope.com

OSG BELUX
Avenue Lavoisier 1
B-1300 Z.I. Wavre - Nord
Belgium
Tel: +32 10 23 05 11
Fax: +32 10 23 05 31
info@osg-belgium.com

OSG IBÉRICA

Bekolarra 4
E - 01010 Vitoria-Gasteiz
Spain
Tel: +34 945 242 400
Fax: +34 945 228 883
osg.iberica@osg-ib.com

OSG FRANCE

Parc Icade, Paris Nord 2
Immeuble "Le Rimbaud"
22 Avenue des Nations
CS66191 - 93420 Villepinte
France
Tel: +33 1 49 90 10 10
Fax: +33 1 49 90 10 15
sales@osg-france.com

OSG ITALY

Via Ferrero, 65 A/B
I - 10098 Rivoli
Italy
Tel: +39 0117705211
Fax: +39 0117705215
info@osg-italia.it

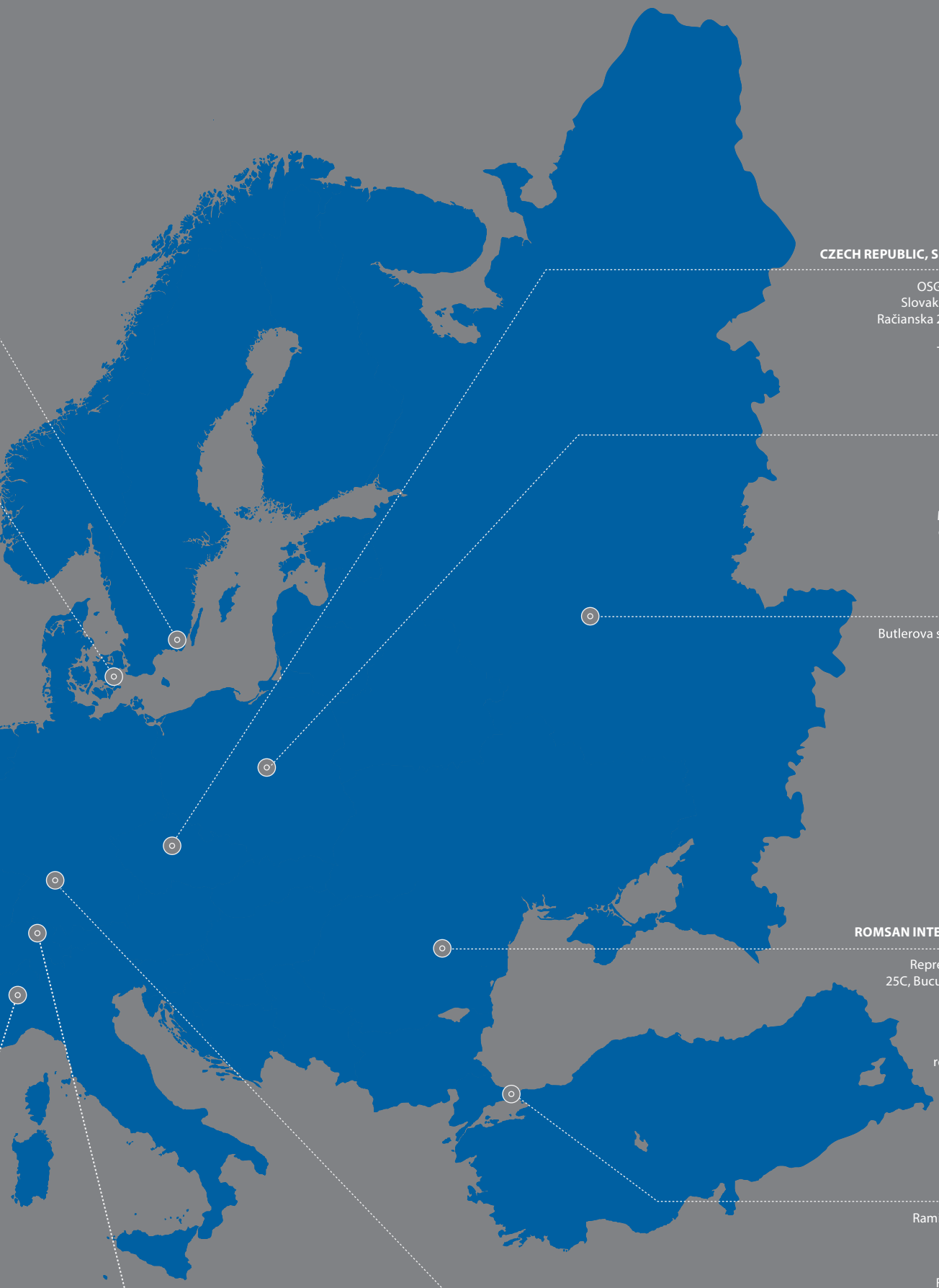

CZECH REPUBLIC, SLOVAKIA, HUNGARY

OSG Europe Logistics S.A.
Slovakia, organizačná zložka
Račianska 22/A, Bratislava 831 02
Slovakia
Tel.: +421 24 32 91 295
info@osgeurope.com

OSG POLAND

ul. Spółdzielcza 57
05-074 Halinów
Polska
Tel: +22 760 82 71
Mob. +48 570 677 711
osg@osg-poland.com

OSG RUSSIA

Butlerova street, 17B, office 5069
117342 Moscow
Russia
Tel: +7 (495) 150 41 54
info@osg-russia.com

ROMSAN INTERNATIONAL CO. SRL

Reprezentant Exclusiv OSG
25C, Bucuresti-Magurele Street
051431 Bucuresti
România
Tel: +40 21 322 07 47
Fax: +40 21 321 56 00
romsan.int@romsan.ro

OSG TURKEY

Rami Kişla Cad.No:56 Eyüp
Istanbul 34056
Turkey
Tel: +90 212 565 24 00
Fax: +90 212 565 44 00
info@osg-turkey.com

Vischer & Bolli AG

Machining and Workholding
Im Schossacher 17
CH-8600 Dübendorf
Schweiz
Tel.: +41 44 802 15 15
Fax: +41 44 802 15 95
info@vb-tools.com

OSG GERMANY

Karl-Ehmann-Str. 25
D - 73037 Göppingen
Germany
Tel: +49 7161 6064 - 0
Fax: +49 7161 6064 - 444
info@osg-germany.de

shaping your dreams

OSG EUROPE LOGISTICS
Avenue Lavoisier 1
B-1300 Z.I. Wavre - Nord - Belgium
Tel: +32 10 23 05 07
Fax: +32 10 23 05 51
info@osgeurope.com

OSG BELUX
Avenue Lavoisier 1
B-1300 Z.I. Wavre - Nord - Belgium
Tel: +32 10 23 05 11
Fax: +32 10 23 05 31
info@osg-belgium.com

OSG FRANCE
Parc Icade, Paris Nord 2
Immeuble "Le Rimbaud"
22 Avenue des Nations
CS66191 - 93420 Villepinte - France
Tel: +33 1 49 90 10 10
Fax: +33 1 49 90 10 15
sales@osg-france.com

OSG NETHERLANDS
Bedrijfsweg 5 - 3481 MG Harmelen
Tel: +31 348 44 2764
Fax: +31 348 44 2144
info@osg-nl.com

OSG UK
Kelsey Close, Attleborough Fields Ind Est,
CV11 6RS, Nuneaton, United Kingdom.
Tel: +44 1827 720 013
uk_sales@osg-uk.com

CZECH, SLOVAKIA, HUNGARY
OSG Europe Logistics S.A.
Slovakia organizacna zlozka
Racianská 22/A, SK-83102 Bratislava
Slovakia
Tel. +421 24 32 91 295
Orders-osgsvk@osgeurope.com

OSG POLAND Sp. z.o.o.
Spółdzielcza 57
05-074 Halinów - Poland
Tel: +22 760 82 71
Fax: +22 760 82 71
osg@osg-poland.com

OSG GERMANY
Karl-Ehmann-Str. 25
D - 73037 Göppingen - Germany
Tel: +49 7161 6064 - 0
Fax: +49 7161 6064 - 444
info@osg-germany.de

OSG SCANDINAVIA
(For Scandinavian countries)
Langebjergvaenget 16
4000 Roskilde - Denmark
Tel: +45 46 75 65 55
Fax: +45 46 75 67 00
osg@osg-scandinavia.com

SWEDEN
Branch office of OSG SCANDINAVIA
Singelgatan 7
212 28 Malmö - Sweden
Tel: +46 40 41 22 55
osg@osg-scandinavia.com

OSG IBERICA
Bekolarra 4
E - 01010 Vitoria-Gasteiz - Spain
Tel: +34 945 242 400
Fax: +34 945 228 883
osg.iberica@osg-ib.com

RUSSIA
Butlerova street, 17B, office 5069
117342 Moscow - Russia
Tel: +7 (495) 150 41 54
info@osg-russia.com

OSG TURKEY
Rami Kişla Cad.No:56 Eyüp
Istanbul 34056 - Turkey
Tel+90 212 565 24 00
Fax: +90 212 565 44 00
info@osg-turkey.com

ROMSAN INTERNATIONAL CO. SRL
Reprezentant Exclusiv OSG
25C, Bucuresti-Magurele Street
051431 Bucuresti - România
Tel: +40 21 322 07 47
Fax: +40 21 321 56 00
romsan.int@romsan.ro

AUSTRIA
Branch office of OSG GERMANY
Messestraße 11
A-6850 Dornbirn
Tel: +49 7161 6064-0
Fax: + 49 7161 6064-444
info@osg-germany.de

OSG ITALIA
Via Ferrero, 65 A/B3
I - 10098 Rivoli - Italy
Tel: +39 0117705211
Fax: +39 0117705215
info@osg-italia.it

Vischer & Bolli AG
Machining and Workholding
Im Schossacher 17
CH-8600 Dübendorf
T +41 44 802 15 15
F +41 44 802 15 95
info@vb-tools.com

OSG EUROPE LOGISTICS S.A.

02/2023 - All rights reserved. © OSG Europe 2023

The contents of this catalogue are provided to you for viewing only. They are not intended for reproduction either in part or in whole in this or other medium. They cannot be copied, used to create derivation work or used for any reason, by means without the express, written permission of the copyright owner. If prices are stated, they are netto unit-prices and any eventual tax(es) have to be added. The company is not responsible for any printing error in technical, price and/or any other data.

Tool specifications subject to change without notice.

www.osgeurope.com